Embracing Challenge

Liquid Alarm Sensor

KS3,
Ex KS3 EX, KS3 EX PEEK,
Ex KS3 EX PEEK SS, KS3 EX SS
for non-conductive and conductive media

Instruction Manual
Version 1.02.04

Dear customer,

Thank you for buying our product. In this instruction manual you will find all necessary information about this M&C product. The information in the instruction manual is fast and easy to find, so you can start using your M&C product right after you have read the manual.

If you have any question regarding the product or the application, please don't hesitate to contact M&C or your M&C authorized distributor. You will find all the addresses in the appendix of this manual.

For additional information about our products and our company, please go to M&C's website www.mc-techgroup.com. There you will find the data sheets and manuals of our products in German and English.

Disclaimer
This manual does not claim to be complete and it may be subject to technical modifications.

With the release of this version all older manual versions will no longer be valid. The German instruction manual is the original instruction manual. In case of arbitration only the German wording shall be valid and binding.

Version: 1.02.04

Content

List of illustrations

Head Office

M&C TechGroup Germany GmbH ◆ Rehhecke 79 ◆ 40885 Ratingen ◆ Germany
Telephone: 02102 / 935 - 0
Fax: 02102 / 935 - 111
E - mail: info@mc-techgroup.com
www.mc-techgroup.com

1 GENERAL INFORMATION

The product described in this manual has been built and tested in our production facility.
All M&C products are packed to be shipped safely. To ensure the safe operation and to maintain the safe condition, all instructions and regulations stated in this manual need to be followed. This manual includes all information regarding proper transportation, storage, installation, operation and maintenance of this product by qualified personnel.
Follow all instructions and warnings closely.
Read this manual carefully before commissioning and operating the device. If you have any questions regarding the product or the application, please don't hesitate to contact M&C or your M&C authorized distributor.

2 DECLARATION OF CONFORMITY

CE - Certification

The product described in this operating manual complies with the following EU directives:

ATEX-Directive

The product which is described in this manual is produced in accordance with the EU directive for devices and protection systems for appropriate use in hazardous areas 2014/34/EU appendix II.

RoHS Directive

The requirements of the RoHS2 ('Restriction of Hazardous Substances 2') directive 2011/65/EU and its annexes are met.

Declaration of conformity

The EU Declaration of conformity can be found in the annex of this manual. It can also be downloaded from the **M&C** homepage or directly requested from **M&C**.

3 SAFETY INSTRUCTIONS

Follow these safety directions and instructions regarding installation, commissioning and operation of this equipment:

Read this manual before commissioning and operating the product. Make sure to follow all safety instructions.

Installation and commissioning of electrical devices must be carried out only by qualified skilled personnel in compliance with the current regulations.

The installation and commissioning of the device must conform to the requirements of VDE 0100 (IEC 364) 'Regulations on the Installation of Power Circuits with Nominal Voltages below 1000 V' and must be in compliance with all relevant regulations and standards.

Before connecting the device, please make sure to compare the supply voltage with the specified voltage on the product label.

Protection against damages caused by high voltages:
Disconnect the power supply before opening the device for access. Make sure that all extern power supplies are disconnected.

Operate the device only in the permitted temperature and pressure ranges. For details please refer to the technical data sheet or manual.

Install the device only in protected areas, sheltered from sun, rain and moisture. The product should not be exposure to the elements.

Only the especially marked KS3 EX versions are allowed to be operated in hazardous areas.

When installing a KS3 EX sensor in a filter or collection vessel, the explosion group changes from IIc to IIb.

Installation, maintenance, inspections and any repairs of the devices must be carried out only by qualified skilled personnel in compliance with the current regulations.

3.1 INTENDED USE

Only the especially marked KS3 EX versions are allowed to be operated in hazardous areas.
When installing a KS3 EX sensor in a filter or collection vessel, the explosion group changes from IIc to IIb.
The device can only be operated under the conditions described in chapter 6 "Important notes regarding the usage in explosive atmospheres KS3 EX versions only", chapter 7 "Important notes regarding the usage of KS3/KS3 EX versions" and chapter 8 "Technical Data" of these operating instructions.
Refrain from any use other than for this purpose. Improper use can lead to serious injury, see the safety instructions at the appropriate place.

4 WARRANTY

In case of a device failure, please contact immediately M&C or your M&C authorized distributor.
We have a warranty period of 12 months from the delivery date. The warranty covers only appropriately used products and does not cover the consumable parts. Please find the complete warranty conditions in our terms and conditions.
The warranty includes a free-of-charge repair in our production facility or the free replacement of the device. If you return a device to M&C, please be sure that it is properly packaged and shipped with protective packaging. The repaired or replaced device will be shipped free of delivery charges to the point of use.

5 WARNING SIGNS AND DEFINITIONS

Danger

The 'Danger' warning sign indicates that death, serious injury and/or significant material damage will be the consequence, if the appropriate precautions should not be taken.

Warning

The 'Warning' warning sign indicates that death, serious injury or damage to property may occur if the relevant precautionary measures are not observed.

Caution

The 'Caution' warning sign indicates that slight personal injury can occur if the appropriate safety precautions are not observed.

Caution

'Caution' indicates that damage to property can occur if the appropriate safety precautions are not observed.

Attention

'Attention' indicates that an unintended result or situation can occur if the corresponding information is not taken into account.

Note

'Note' indicates important information relating to the product or highlights parts of the documentation for special attention.

Qualified personnel

'Qualified personnel' are experts who are familiar with the installation, mounting, commissioning and operation of these types of products.

'Ex' indicates important information about the product or about the corresponding parts in the instruction manual, relating to usage in potentially explosive atmospheres.

High voltages!
Protect yourself and others against damages which might be caused by high voltages.

Toxic!
Acute toxicity (oral, dermal, inhalation)! Toxic when in contact with skin, swallowed or inhaled.

Corrosive!
These substances destroy living tissue and equipment upon contact.
Do not breathe vapors; avoid contact with skin and eyes.

Contains gas under pressure. Do not open container!
Check pressure before opening container and adjust pressure to atmospheric pressure.

Wear protective gloves!
Working with chemicals, sharp objects or extremely high temperatures requires wearing protective gloves.

Wear safety glasses!
Protect your eyes while working with chemicals or sharp objects. Wear safety glasses to avoid getting something in your eyes.

Wear protective clothes!
Working with chemicals, sharp objects or extremely high temperatures requires wearing protective clothes.

6 IMPORTANT NOTES REGARDING THE USAGE IN EXPLOSIVE ATMOSPHERES KS3 EX VERSIONS ONLY

The device, according to the ATEX certification, can be mounted and operated in potentially explosive atmosphere of explosive zone 1.

The Ex marking for the ATEX versions are:

Ex II 2G Ex ia IIC T6 Gb

The ATEX versions are certified by DEKRA EXAM GmbH.
You will find a copy of the Type Examination Certificate BVS 16 ATEX E 127 EU and the IECEx Certificate of Conformity IECEx BVS 16.0092 in the appendix of this instruction manual. Follow closely all specified conditions and installation instructions stated in the Type Examination Certificate (see appendix) regarding the installation and operation of the device.
Only by complying to all requirements stated in the Type Examination Certificate, safe operation in explosive atmospheres is ensured.

Any modification of the standard configuration with parts, which are not approved by M&C and not explicitly specified for usage in explosive atmospheres, will void the Type Examination Certificate. This also refers to any repair work and service using parts which are not M&C approved and not specified for usage in explosive atmospheres.
- Please don't hesitate to contact M&C or your M&C distributer if you have any questions about parts, repair work and services.

Pay close attention to the Type Examination Certificate (see appendix)!
Do not carry out any work at the sensor while potentially explosive atmosphere is present.
The process and the environment of the device needs to be explosion-free (explosion-free zone) during any maintenance or repair work. A zone is declared as explosion-free zone, if it is free of explosive atmosphere.

Warning

Connect the device to earth (electrical bonding terminal).
The bleeder resistor needs to have an overall value of $< 10^6\ \Omega$.

7 IMPORTANT NOTES REGARDING THE USAGE OF KS3 / KS3 EX VERSIONS

Inhalation hazard possible, if using toxic or asphyxiant gases!
Purge gas-carrying parts with inert gas or air before opening!
If the sensor is used to control toxic or asphyxiant (oxygen-displacing) gas, the gas carrying parts need to be purged with inert gas or air before opening. Follow closely all relevant occupational safety regulations during operation.

Disconnect power supply before opening the device for access.
Make sure that all external power supplies are disconnected.

Do not carry out any work at the sensor while potentially explosive atmosphere is present.
The process and the environment of the device needs to be explosion-free (explosion-free zone) during any maintenance or repair work. A zone is declared as explosion-free zone, if it is free of explosive atmosphere.

Aggressive condensate is possible.

Wear protective gloves and protective glasses!

Wear proper protective clothing!

Filter housing is under pressure! Do not open housing!
If a liquid sensor is built into a filter housing, the filter housing might be under pressure. Check pressure before opening filter housing and adjust pressure to atmospheric pressure.
If there is permanent over pressure (> atm) present in the system/process, the protecting filter glass cover PS (Part No.: 90F0032) needs to be installed.

8 APPLICATION

The liquid alarm sensor type KS3... is an adequate replacement for the previous KS2... model. The KS3... has a rugged aluminium enclosure. Additionally, the operating temperature range for the KS3 EX versions has been extended to -20 °C up to 50°C [-4 to 122 °F] in connection with the renewed Type Examination Certificate.

Liquid alarm sensors are used in gas sample conditioning systems for monitoring gas cooling and condensate removal devices in order to provide protection for downstream analysis instruments. This monitoring device **KS3, KS3 EX, KS3 EX Peek, KS3 EX Peek SS, KS3 EX SS** reliably signals the penetration of **non-conductive** (e.g. alcohol) **and conductive** (e.g. water) **liquids** in the event of cooling or condensate removal equipment being defective, thus avoiding expensive down time as well as high repair costs for analysis instruments.
In the event of an alarm, we recommend switching off the power supply of the pump or shut-off a solenoid valve (NC).

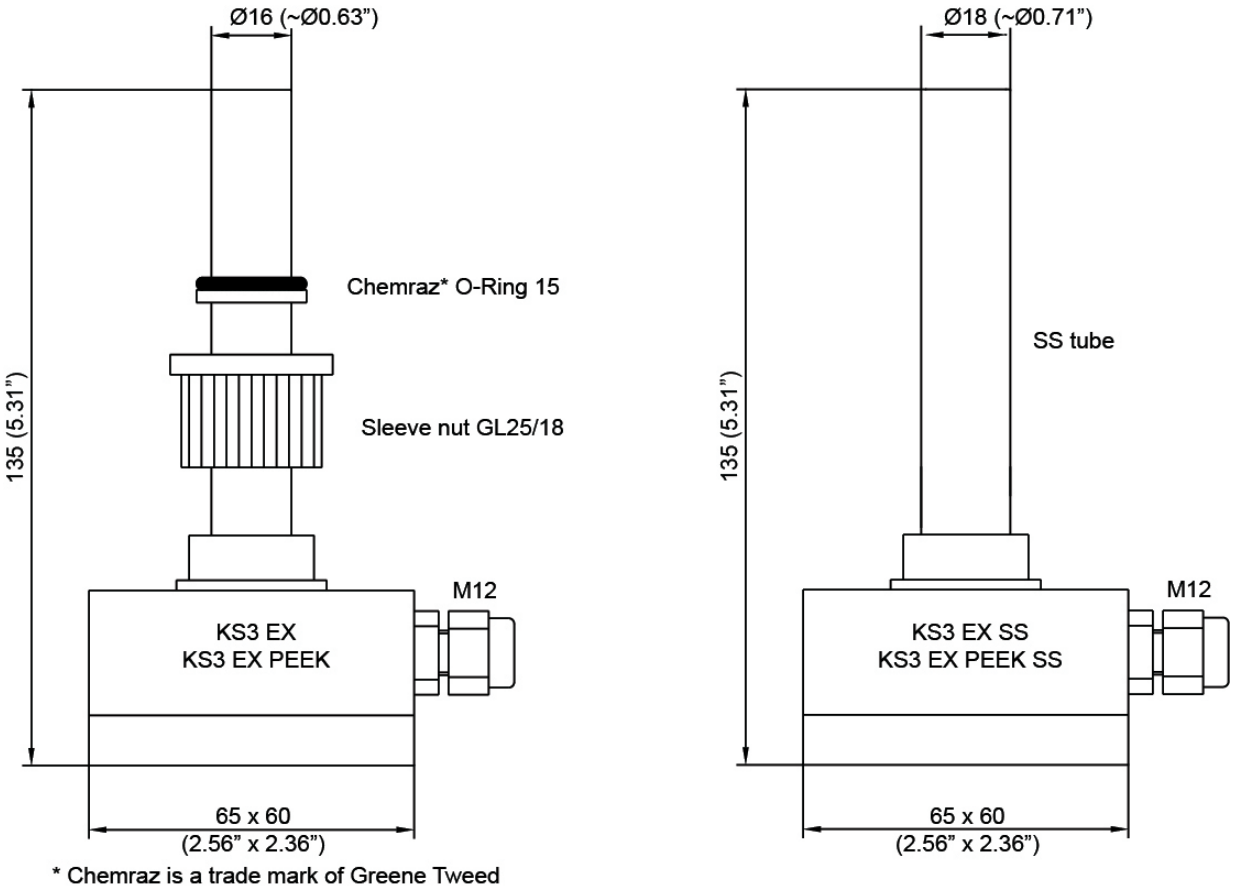

Figure 1 KS3 / KS3 EX Liquid-Sensor

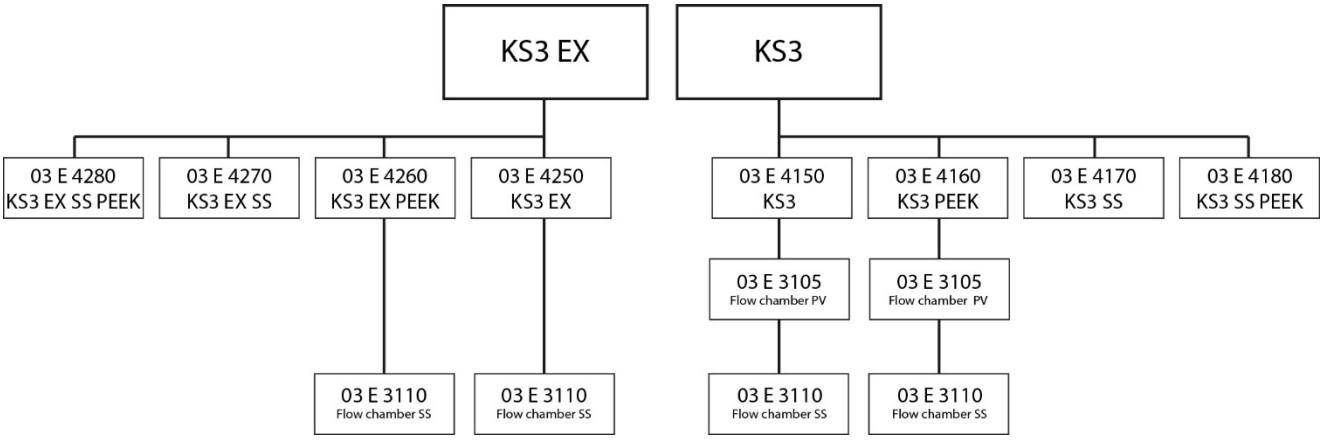

Figure 2 KS3 overview

9 TECHNICAL DATA

Sensors for non-EX areas				
Sensor	**KS3**	**KS3 Peek**	**KS3 SS**	**KS3 Peek SS**
Part No.	**03E4150**	**03E4160**	**03E4170**	**03E4180**
Pressure	Max. 2 bar abs.	Max. 11 bar abs.	Max. 2 bar abs.	Max. 11 bar abs.
Max. operating temperature	-20 to +60 °C* [-4 to 140 °F]*			
Liquid alarm limit	1.5 ml			
Material of sample contacting parts	PTFE, Chemraz**, SS 316Ti	Peek, Chemraz**, SS 316Ti	PTFE, Chemraz**, SS 316Ti	Peek, Chemraz**, SS 316Ti
Sample connection Standard (Fitting for mounting in stainless steel filter: connector GE SS ½" NPT-18 mm Part No.: 09 V 2317)	Ø 16 mm for GL25	Ø 16 mm for GL25	Ø 18 mm for mounting inside stainless steel filter FSS...-D1/2" NPT	Ø 18 mm for mounting inside stainless steel filter FSS...-D1/2" NPT
Method of mounting/ mounting position	Clamping attachment/for liquid alarm vertical mounting position with opening facing upwards			
Power supply	8-12 V DC/ feeding via FA1.4 or FA1.1			
Connection cable, length 1.5 m [≈ 4.92 ft] *standard*	3 x 0.34 mm^2			
Cable capacity / inductivity	200 pF/m / 1 µH/m			
Protection	IP 54 DIN 60529			
Weight	230 g [≈ 0.51 lb]		260 g [≈ 0.57 lb]	

* To specify the minimum operating temperature, the freezing point of the condensate needs to be considered.
** Chemraz is a trademark of Greene Tweed

Sensors for EX areas				
Sensor	**KS3 EX**	**KS3 EX Peek**	**KS3 EX SS**	**KS3 EX Peek SS**
Part No.	**03E4250**	**03E4260**	**03E4270**	**03E4280**
Pressure	Max. 2 bar abs.	Max. 11 bar abs.	Max. 2 bar abs.	Max. 11 bar abs.
Max. operating temperature	-20 to +50 °C* [-4 to 122 °F]*			
Liquid alarm limit	1.5 ml			
Material of sample contacting parts	PTFE, Chemraz**, SS 316Ti	Peek, Chemraz**, SS 316Ti	PTFE, Chemraz**, SS 316Ti	Peek, Chemraz**, SS 316Ti
Sample connection Standard (Fitting for mounting in stainless steel filter: connector GE SS ½“ NPT-18 mm Part No. 09V2317)	Ø 16 mm for GL25	Ø 16 mm for GL25	Ø 18 mm for mounting inside stainless steel filter FSS...-D1/2“ NPT	Ø 18 mm for mounting inside stainless steel filter FSS...-D1/2“ NPT
Method of mounting/ mounting position	Clamping attachment/for liquid alarm vertical mounting position with opening facing upwards			
Max. voltage/current/ power consumption	13.5 V/31 mA/125 mW			
Internal capacity max.	150 nF			
Internal inductivity max.	0 mH			
Power supply	8 V DC/Max. 2.4 mA, during operation: < 1.4 mA alarm			
Connection cable, length 1.5 m [≈ 4.92 ft] *standard*	2 x 0.25 mm^2			
Cable capacity inductivity	200 pF/m 1 µH/m			
Protection	Ex II 2G Ex ia IIC T6 Gb (if mounted inside a filter or a condensate vessel: Ex II 2G Ex ia IIB T6 Gb) BVS 16 ATEX E 127, IECEx BVS 16.0092			
Weight	230 g [≈ 0.51 lb]		260 g [≈ 0.57 lb]	

* To specify the minimum operating temperature, the freezing point of the condensate needs to be considered.
** Chemraz is a trademark of Greene Tweed

10 DESCRIPTION

The **M&C** liquid sensors **KS3, KS3 EX, KS3 EX Peek, KS3 EX Peek SS and KS3 EX SS** operate according to the principle of capacitive measurement. A pre-amplifier is integrated into the sensor housing, and is connected with the necessary external electronic controller via 2-wires (3-wires only for non-EX devices).

The M&C liquid sensors KS3, KS3 EX, KS3 EX Peek, KS3 EX Peek SS and KS3 EX SS are suitable for non-conductive and conductive media. The liquid sensors are designed in such a way that any droplets of liquid in the sample gas are attracted directly to the active sensor surface. Even small liquid droplets will trigger a sure and rapid alarm. The sensor signal will be converted to an electronic signal following the NAMUR standard.
For the sensor type **KS3/** the required electronic controller is available in various versions: **FA1.1** or **FA1.4**. They are described in a separate data sheet.

The **M&C** liquid sensors **KS3 EX, KS3 EX Peek, KS3 EX Peek SS and KS3 EX SS** are designed for applications in hazardous areas. They can only be operated in conjunction with electronic controller **KFA6-SR2-Ex1.W** or an electronic with the same performance data (see chapter 11.5). For electronics with the same performance data there is no guarantee for error-free operation.
The **M&C KS3 / KS3 EX…** liquid sensors are designed in such a way that any droplets of liquid in the sample gas are attracted directly to the active sensor surface. Even small liquid droplets will trigger a sure and rapid alarm. The sensors can be mounted with the 16 mm ∅ stainless steel body e.g. in the GL-25 connector of the Universal filter **F..-../-D** or the condensate vessel **TG 1** or in the flow chamber **LS/KS**.

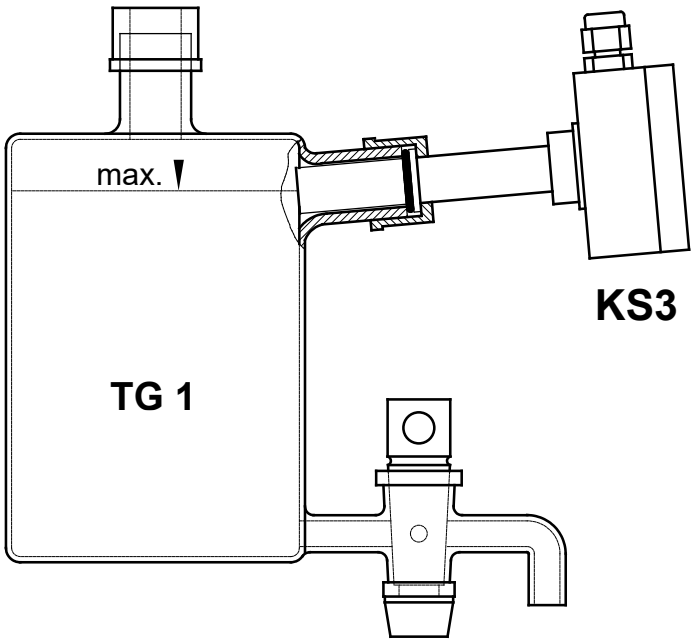

Figure 3 KS3... liquid sensor for level monitoring in the condensate vessel type TG 1

Attention! If you mount the KS3 EX… inside a TG X condensate vessel, the permitted gas group is IIA/IIB.

In the event of condensate breakthrough, the filter acts as a buffer vessel preventing immediate liquid penetration.

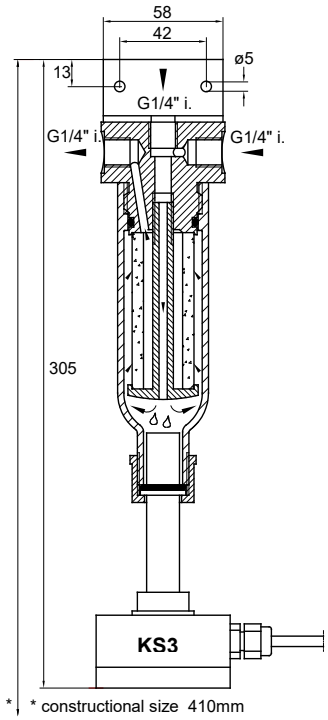

Figure 4 Liquid alarm-sensor KS3 inside a Universal filter F..-../-D

Attention!

If you mount the KS3 EX… inside a Universal filter F..-../-D with a glass body, the permitted gas group is IIA / IIB. If you mount the KS3 EX… inside a Universal filter F..-../-D with SS body, the permitted gas group is IIC.

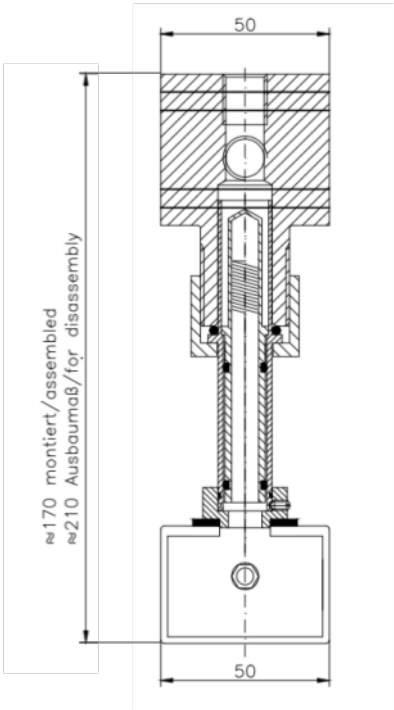

Figure 5 Liquid alarm-sensor KS3 / KS3 EX inside the flow chamber LS/KS

Attention!

If you mount the KS3 EX… inside a PVDF flow chamber, the permitted gas group is IIA / IIB. If you mount the KS3 EX… inside a SS flow chamber, the permitted gas group is IIC.

11 FUNCTION

11.1 CONNECTION AND ADJUSTMENT OF THE SENSOR TYPE KS3 AT THE ELECTRONIC FA1.1

- Connect the sensor to the electronic FA1.1 (see also manual Series FA®, FA -1/2/3,bi)

KS3 terminal X1/3 to FA1.1 terminal 15 (yellow)
KS3 terminal X1/2 to FA1.1 terminal 17 (white)
KS3 terminal X1/1 to FA1.1 terminal 18 (brown)

Setting while sensor is 'dry':

- Turn the potentiometer to the left until the green LED is OFF and the red LED is ON.
  Turn the potentiometer very slowly to the right. After the green LED is ON, turn the potentiometer for another 0.5 rotations to the right.

Checking the sensibility:

Test the sensor with the condensate of your application, if possible. A condensate quantity of 1.5 ml should trigger the alarm. The sensor can be adjusted to a higher sensibility if the potentiometer is turned to the left.

Note A sensor with high sensitivity can cause false alarms.

11.2 CONNECTION AND ADJUSTMENT OF THE SENSOR TYPE KS3 AT THE ELECTRONIC FA1.4

- Connect the sensor to the electronic FA1.4 (see also manual Series FA®, FA -1/2/3,bi)

KS3 terminal X1/3 to FA1.4 terminal 15 (yellow)
KS3 terminal X1/2 to FA1.4 terminal 17 (white)
KS3 terminal X1/1 to FA1.4 terminal 18 (brown)

Setting while sensor is 'dry':

- Turn the potentiometer to the left until the green LED is OFF and the red LED is ON.
  Turn the potentiometer very slowly to the right. After the green LED is ON, turn the potentiometer for another 0.5 rotations to the right.

Checking the sensibility:

Test the sensor with the condensate of your application, if possible. A condensate quantity of 1.5 ml should trigger the alarm. The sensor can be adjusted to a higher sensibility if the potentiometer is turned to the left.

Note A sensor with high sensitivity can cause false alarms.

11.3 INSTALLATION NOTES REGARDING KS3 EX VERSIONS

Mounting and installation

The standard electronic controller described in this manual, needs to be installed outside the area of potentially explosive atmosphere. Make sure to comply with the installation regulations according to IEC/EN 60079-14.

Requirements for usage as an associated equipment

Current circuits with the ignition protection category Ex i, which were operated by a non-intrinsically safe circuit, are not allowed to be used as a protection category Ex i current circuit afterwards.

The intrinsically safe circuits of the associated equipment may be routed into explosive areas. Make sure to comply with the required separation distances to all non-intrinsically safe circuits according to IEC/EN 60079 -14.

Make sure to comply with the required separation distances between two adjacent intrinsically safe circuits according to IEC/EN 60079 -14.

Make sure to consider the maximum values of the device, if connecting the device to an intrinsically safe equipment.

Make sure to consider the respective maximum values of the intrinsically safe devices with regards to explosion protection (verification of intrinsic safety), if connecting the intrinsically safe devices with the intrinsically safe circuits of the associated equipment.

Make sure to comply with the IEC/EN 60079-14 or IEC/EN 60079-25 standards.

11.4 CONNECTION OF THE KS3 EX VERSIONS TO THE ELECTRONICS KFA6-SR2-EX1.W

Move all switches (S1-S3) on the front into position I (left).

The function is as follows:

Dry sensor

LED position	LED name	Color / status	Description
Left	OUT	Yellow on	Contact MC-NO (terminal 7 and 8) closed, Sensor current > 1.7 mA

Wet sensor

LED position	LED name	Color / status	Description
Left	OUT	Yellow off	contact MC-NC (terminal 7 and 9) closed, Sensor current < 1.4 mA

The other LED's:

LED position	LED name	Color / status	Description
In the middle	CHK	Red off	Sensor circuit OK
In the middle	CHK	Red flashing	Sensor circuit Open
Right	PWR	Green on	Power on
Right	PWR	Green off	Power off

11.5 ADJUSTMENT OF THE KS3 EX VERSIONS

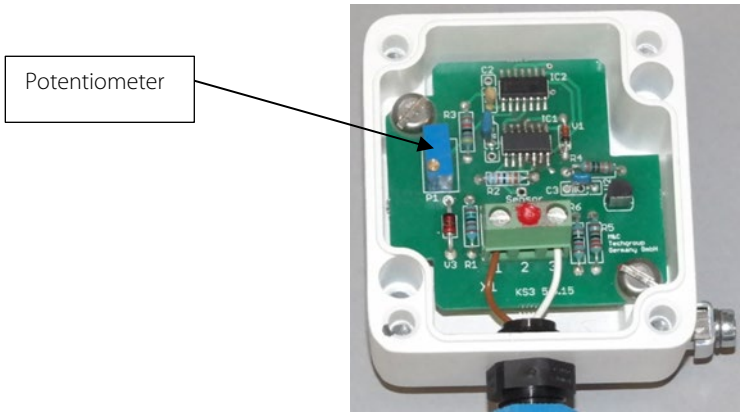

Figure 6 Electronic KFA6-SR2-EX1.W (left) and terminal box KS3 EX

- Turn the potentiometer (figure 6) to the left until the LED is OFF.
- Turn the potentiometer slowly to the right. After the LED is ON, turn the potentiometer for another 1.5 rotations to the right.

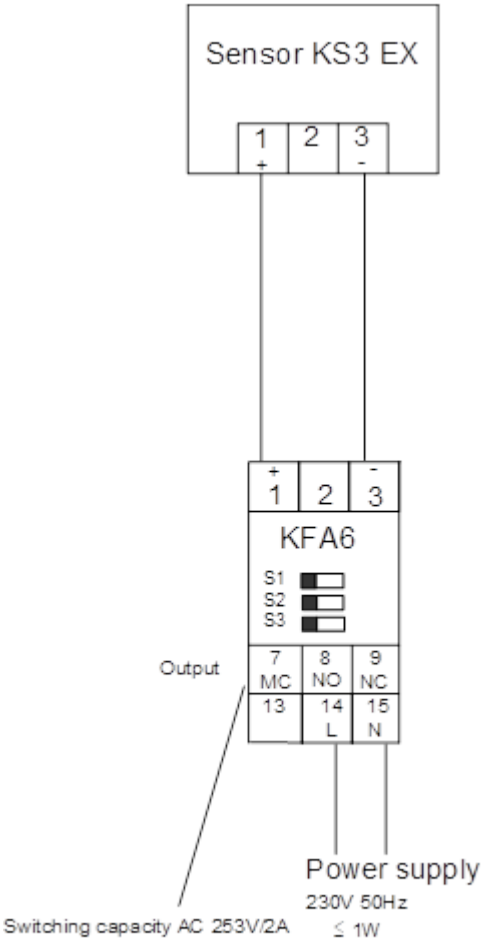

Figure 7 Wiring diagram KS3 EX and KFA6-SR2-EX1.W

Technical data for switch amplifiers (technical data KS3… see page 11)

Technical data according to the certificate of conformity for KS3 EX, KS3 EX Peek, KS3 EX Peek SS and KS3 EX SS	
Max. input voltage	U_i 13.5 V
Max. input current	I_i 31 mA
Max. input power consumption	Pi 125 mW
Internal inductivity Li	Li negligible
internal capacity	Ci 150 nF
connection terminals	X1.1 and X1.3
The intrinsically safe circuit is, under normal operation conditions, connected to earth. It is necessary to ensure equipotential bonding along all intrinsically safe circuits. Connection terminal X1.2 is secured with a special sealing coating. It is prohibited to use this terminal to start the EX-sensors.	

Evaluation e.g. by using the section switch amplifier KFA6-SR2-EX1.W	
Nominal data according to DIN 19234 respectively Namur	
Voltage U_O	10.6 V
Current I_0	19 mA
Power consumption P_0	51 mW

12 COMMISSIONING

Before commissioning the device, make sure to comply with all facility-and process-specific safety measures.

Make also sure to comply with all safety regulations and measures regarding the used medium.

Warning

Before commissioning, connect the wires of the sensor according to the description in chapter 11.

Before commissioning, make sure the supply voltage corresponds to the specified voltage on the product label of the electronic controller.

To specify the minimum operating temperature of the device, make sure to consider the freezing point of the condensate.
For safety reasons, the minimum ambient temperature should be 5 °C [9 °F] higher than the freezing point of the condensate. The sensing element can be used at temperatures from -20 to 50 °C [-4 to 122 °F].

Warning

Do not carry out any work at the sensor while potentially explosive atmosphere is present.

The process and the environment of the device needs to be explosion-free (explosion-free zone) during any work. A zone is declared as explosion-free zone, if it is free of explosive atmosphere.

Warning

Connect the device to earth (electrical bonding terminal).
The bleeder resistor needs to have an overall value of $< 10^6\ \Omega$.

13 MAINTENANCE

Before starting any maintenance work, make sure that any work done on the device is in compliance with all relevant regulations and standards.

Warning

Disconnect power supply before opening the device for access.
Make sure that all external power supplies are disconnected.

Do not carry out any work at the sensor while potentially explosive atmosphere is present.

The process and the environment of the device needs to be explosion-free (explosion-free zone) during any maintenance or repair work. A zone is declared as explosion-free zone if it is free of explosive atmosphere.

Warning

Inhalation hazard possible, if using toxic or asphyxiant gases!
Purge gas-carrying parts with inert gas or air before opening!

If the sensor is used to control toxic or asphyxiant (oxygen-displacing) gas, the gas carrying parts need to be purged with inert gas or air before opening. Follow closely all relevant occupational safety regulations during operation.

Warning

Connect the device to earth (electrical bonding terminal).
The bleeder resistor needs to have an overall value of < 10^6 Ω sein.

Aggressive condensate is possible.

Wear protective gloves and protective glasses!

Wear proper protective clothing!

Filter housing is under pressure! Do not open housing!
If a liquid sensor is built into a filter housing, the filter housing might be under pressure. Check pressure before opening filter housing and adjust pressure to atmospheric pressure.
If there is permanent over pressure (> atm) present in the system/process, the protecting filter glass cover PS (Part No.: 90F0032) needs to be installed.

The intervals between servicing are dependent on the process and system conditions in your facility. The facility QA/QC plan should address the frequency for maintenance and should be updated based on your operations.

The maintenance is mainly focused on checking the seals and gaskets of the KS3… sensors.

14 PROPER DISPOSAL OF THE DEVICE

At the end of the service life of our products, it is important to take care of the appropriate disposal of obsolete electrical and non-electrical devices. To help protect our environment, follow the rules and regulations of your country regarding recycling and waste management.

15 SPARE PARTS LIST

Wear, tear and replacement part requirements depend on specific operating conditions.
The recommended quantities are based on experience and are not binding.

Liquid sensor type KS3/KS3 EX versions

(C) Consumables and (R) Recommended spare parts, (O) Options

			recommended quantity in operation [years]		
Part number	Description	C/R/O	1	2	3
91E4000	O-Ring ∅ 15 x 2.5mm for KS-Sensor Material: Chemraz	R	1	2	3
91E4005	O-Ring ∅ 9 x 2 mm for KS-Sensor Material: Chemraz	R	1	2	3
91E4010	O-Ring ∅ 9 x 2 mm for KS-Sensor Material: Viton	R	1	2	3
91E4015	O-Ring ∅ 13 x 1 mm for KS-Sensor Material: Viton	R	1	2	3
90F0022	Union nut GL25/18	R	1	2	3
01F7400X	Universal filter type FSS- completely made of stainless steel 316Ti, without depth filter element. Material: SS 316Ti, for KS3-SS (Ex) 18mm	O			

16 APPENDIX

- Mounting of the sensor type **KS3**

- EC-Type Examination Certificate: DEKRA EXAM GmbH BVS 16 ATEX E 127
- IECEx Certificate of Conformity IECEx BVS 16.0092
- EU Declaration of conformity

For additional manuals and data sheets:
www.mc-techgroup.com

- Manual flow alarm Serie FA®, FA -1/2/3,bi

- Data sheet condensate vessel Version TG1, TG1/LA1, TG10, TK10, TK11, TK12/LA5, TK13

- Data sheet universal filter Serie FP®, FT® , Version FP-D, FT-D, FT-H-D, FS-D, FSS-D to separate gas and liquid

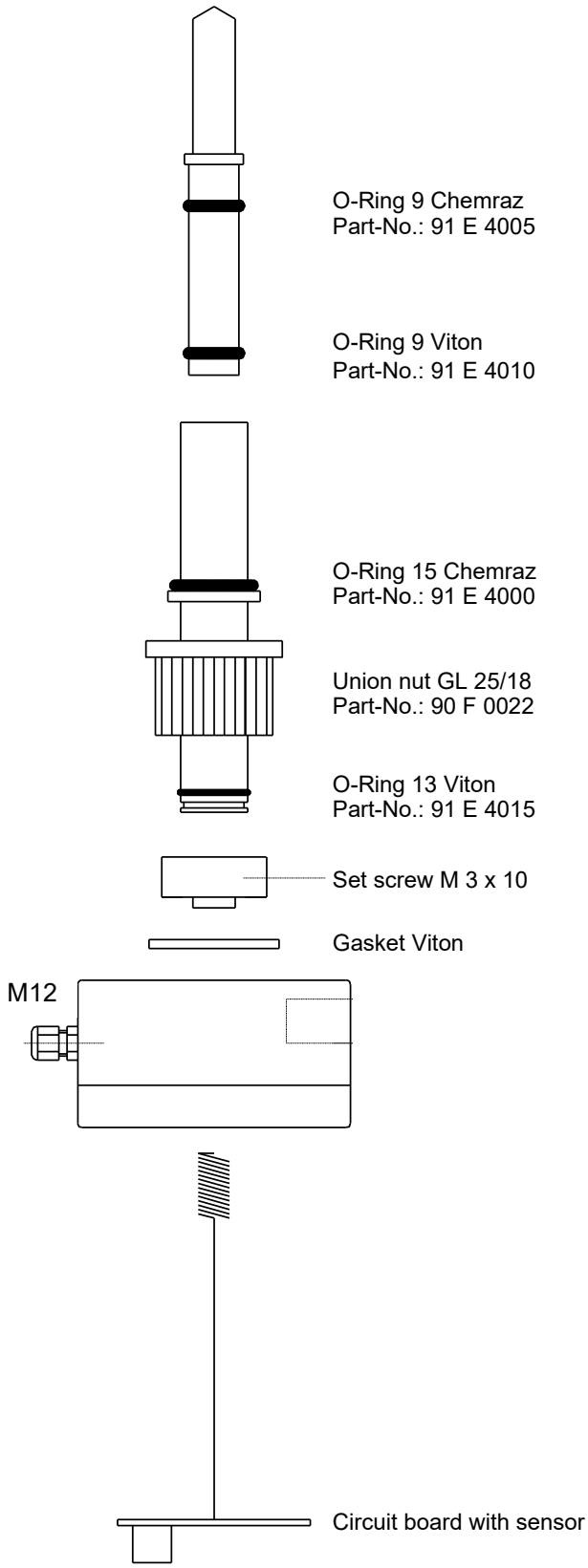

Figure 8 Mounting of the sensor type KS3

Translation

1 # EU-Type Examination Certificate

2 **Equipment or Protective System intended for use in potentially explosive atmospheres Directive 2014/34/EU**

3 EU-Type Examination Certificate Number: **BVS 16 ATEX E 127**

4 Product: **Fluid detecting sensor types** **KS3 Ex**
KS3 Ex SS
KS3 Ex Peek
KS3 Ex Peek SS

5 Manufacturer: **M&C TechGroup Germany GmbH**

6 Address: **Rehhecke 79, 40885 Ratingen, Germany**

7 This product and any acceptable variations thereof are specified in the appendix to this certificate and the documents referred to therein.

8 DEKRA EXAM GmbH, Notified Body number 0158, in accordance with Article 17 of Directive 2014/34/EU of the European Parliament and of the Council, dated 26 February 2014, certifies that this product has been found to comply with the Essential Health and Safety Requirements relating to the design and construction of products intended for use in potentially explosive atmospheres given in Annex II to the Directive.
The examination and test results are recorded in the confidential Report No. BVS PP 16.2220 EU.

9 Compliance with the Essential Health and Safety Requirements has been assured by compliance with:

EN 60079-0:2012 + A11:2013 General requirements
EN 60079-11:2012 Intrinsic Safety "i"

10 If the sign "X" is placed after the certificate number, it indicates that the product is subject to the Specific Conditions of Use specified in the appendix to this certificate.

11 This EU-Type Examination Certificate relates only to the design and construction of the specified product. Further requirements of the Directive apply to the manufacturing process and supply of this product. These are not covered by this certificate.

12 The marking of the product shall include the following:

Ex II 2G Ex ia IIC T6 Gb

DEKRA EXAM GmbH
Bochum, 2016-12-19

Signed: Jörg Koch
Certifier

Signed: Dr. Michael Wittler
Approver

DEKRA EXAM GmbH, Dinnendahlstrasse 9, 44809 Bochum, Germany,
telephone +49.234.3696-105, Fax +49.234.3696-110, zs-exam@dekra.com

13 **Appendix**

14 **EU-Type Examination Certificate**
BVS 16 ATEX E 127

15 **Product description**

15.1 **Subject and type**

Fluid detecting sensor types:

KS3 Ex
KS3 Ex Peek
KS3 Ex Peek SS
KS3 Ex SS

15.2 **Description**

The fluid detecting sensor KS3 Ex, KS3 Ex Peek, KS3 Ex Peek SS respectively KS3 Ex SS is suitable for non-conductive and conductive media. It is used to monitor gas coolers and condensate drains.
The sensor signal is converted to an electrical signal according to NAMUR.
The electronic circuit of the different types is identical. They only differ in the construction of the sensor.

15.3 **Parameters**

Terminal	X1.1, X1.3		
Maximum input voltage	U_i	13.5	V
Maximum input current	I_i	31	mA
Maximum input power	P_i	125	mW
Internal capacitance	C_i	150	nF
Internal inductance	L_i	negligible	
Ambient temperature	T_{amb}	$-20\,°C \leq T_{amb} \leq 50\,°C$	

The intrinsically safe circuit and the enclosure are earthed under normal operation conditions.
Along to the intrinsically safe circuit potential equalisation has to be provided.

16 **Report Number**

BVS PP 16.2220 EU, as of 2016-12-19

17 **Special Conditions for Use**

None

18 **Essential Health and Safety Requirements**

The Essential Health and Safety Requirements are covered by the standards listed under item 9.

19 **Drawings and Documents**

Drawings and documents are listed in the confidential report.

We confirm the correctness of the translation from the German original.
In the case of arbitration only the German wording shall be valid and binding.

DEKRA EXAM GmbH
Bochum, dated 2016-12-19
BVS-Scho/Rip/Nu A 20160515

Certifier

Approver

DEKRA EXAM GmbH, Dinnendahlstrasse 9, 44809 Bochum, Germany,
telephone +49.234.3696-105, Fax +49.234.3696-110, zs-exam@dekra.com

1 # EU-Baumusterprüfbescheinigung

2 **Geräte zur bestimmungsgemäßen Verwendung in explosionsgefährdeten Bereichen Richtlinie 2014/34/EU**

3 Nr. der EU-Baumusterprüfbescheinigung: **BVS 16 ATEX E 127**

4 Produkt: **Flüssigkeitsalarmsensor Typen** **KS3 Ex**, **KS3 Ex SS**, **KS3 Ex Peek**, **KS3 Ex Peek SS**

5 Hersteller: **M&C TechGroup Germany GmbH**

6 Anschrift: **Rehhecke 79, 40885 Ratingen, Deutschland**

7 Die Bauart dieses Produktes sowie die verschiedenen zulässigen Ausführungen sind in der Anlage zu dieser Baumusterprüfbescheinigung festgelegt.

8 Die Zertifizierungsstelle der DEKRA EXAM GmbH, benannte Stelle Nr. 0158 gemäß Artikel 17 der Richtlinie 2014/34/EU des Europäischen Parlaments und des Rates vom 26. Februar 2014, bescheinigt, dass das Produkt die wesentlichen Gesundheits- und Sicherheitsanforderungen für die Konzeption und den Bau von Produkten zur bestimmungsgemäßen Verwendung in explosionsgefährdeten Bereichen gemäß Anhang II der Richtlinie erfüllt.
Die Ergebnisse der Prüfung sind in dem vertraulichen Prüfprotokoll BVS PP 16.2220 EU niedergelegt.

9 Die wesentlichen Gesundheits- und Sicherheitsanforderungen werden erfüllt durch Übereinstimmung mit den Normen:

EN 60079-0:2012 + A11:2013	**Allgemeine Anforderungen**
EN 60079-11:2012	**Eigensicherheit "i"**

10 Falls das Zeichen „X" hinter der Bescheinigungsnummer steht, wird in der Anlage zu dieser Bescheinigung auf besondere Bedingungen für die sichere Anwendung des Produktes hingewiesen.

11 Diese EU-Baumusterprüfbescheinigung bezieht sich nur auf den Entwurf und Bau der beschriebenen Produkte.
Für den Herstellungsprozess und die Abgabe der Produkte sind weitere Anforderungen der Richtlinie zu erfüllen, die nicht durch diese Bescheinigung abgedeckt sind.

12 Die Kennzeichnung des Produktes muss die folgenden Angaben enthalten:

Ex **II 2G Ex ia IIC T6 Gb**

DEKRA EXAM GmbH
Bochum, den 19.12.2016

Zertifizierer

Fachzertifizierer

Seite 1 von 2 zu BVS 16 ATEX E 127
Dieses Zertifikat darf nur vollständig und unverändert weiterverbreitet werden.

DAkkS Deutsche Akkreditierungsstelle D-PL-12056-01-00

DEKRA EXAM GmbH, Dinnendahlstraße 9, 44809 Bochum, Deutschland
Telefon +49.234.3696-105, Telefax +49.234.3696-110, zs-exam@dekra.com

13 **Anlage zur**

14 **EU-Baumusterprüfbescheinigung**
BVS 16 ATEX E 127

15 **Beschreibung des Produktes**

15.1 **Gegenstand und Typ**

Flüssigkeitsalarmsensor Typen:

KS3 Ex
KS3 Ex SS
KS3 Ex Peek
KS3 Ex Peek SS

15.2 **Beschreibung**

Der Flüssigkeitsalarm-Sensor KS3 Ex, KS3 Ex Peek, KS3 Ex Peek SS bzw. KS3 Ex SS kann in nicht leitfähigen und leitfähigen Medien eingesetzt werden. Er überwacht Kühlgeräte und Kondensatableiter und signalisiert einen Flüssigkeitseinbruch. Das Sensorsignal wird in ein elektrisches Signal nach dem NAMUR Standard umgewandelt.
Die elektronische Schaltung der verschiedenen Typen ist identisch. Sie unterscheiden sich nur in der Bauart der Sensoren.

15.3 **Kenngrößen**

Anschlussklemmen	X1.1, X1.3		
Maximale Eingangsspannung	U_i	13,5	V
Maximaler Eingangsstrom	I_i	31	mA
Maximale Eingangsleistung	P_i	125	mW
Innere Kapazität	C_i	150	nF
Innere Induktivität	L_i	vernachlässigbar	
Umgebungstemperatur	T_{amb}	$-20\,°C \leq T_{amb} \leq 50\,°C$	

Der eigensichere Stromkreis ist betriebsmäßig geerdet. Entlang der eigensicheren Stromkreise muss Potentialausgleich herrschen.

16 **Prüfprotokoll**

BVS PP 16.2220 EU, Stand 19.12.2016

17 **Besondere Bedingungen für die Verwendung**

Entfällt

18 **Wesentliche Gesundheits- und Sicherheitsanforderungen**

Die wesentlichen Gesundheits- und Sicherheitsanforderungen sind durch die unter Abschnitt 9 gelisteten Normen abgedeckt.

19 **Zeichnungen und Unterlagen**

Die Zeichnungen und Unterlagen sind in dem vertraulichen Prüfprotokoll gelistet.

DEKRA EXAM GmbH, Dinnendahlstraße 9, 44809 Bochum, Deutschland
Telefon +49.234.3696-105, Telefax +49.234.3696-110, zs-exam@dekra.com

IECEx Certificate of Conformity

INTERNATIONAL ELECTROTECHNICAL COMMISSION
IEC Certification System for Explosive Atmospheres

for rules and details of the IECEx Scheme visit www.iecex.com

Certificate No.:	**IECEx BVS 16.0092**	Page 1 of 5	Certificate history: Issue 0 (2016-12-22)
Status:	**Current**	Issue No: 1	
Date of Issue:	2020-08-26		
Applicant:	**M&C TechGroup Germany GmbH** Rehhecke 79 40885 Ratingen-Lintorf **Germany**		
Equipment:	**Fluid detecting sensor types KS3 Ex, KS3 Ex SS, KS3 Ex Peek, KS3 Ex Peek SS**		
Optional accessory:			
Type of Protection:	**Intrinsic Safety "i"**		
Marking:	Ex ia IIC T6 Gb		

Approved for issue on behalf of the IECEx Certification Body: **Jörg Koch**

Position: **Head of Certification Body**

Signature:
(for printed version)

Date:

1. This certificate and schedule may only be reproduced in full.
2. This certificate is not transferable and remains the property of the issuing body.
3. The Status and authenticity of this certificate may be verified by visiting www.iecex.com or use of this QR Code.

Certificate issued by:

DEKRA Testing and Certification GmbH
Certification Body
Dinnendahlstrasse 9
44809 Bochum
Germany

DEKRA
On the safe side.

IECEx Certificate of Conformity

Certificate No.:	**IECEx BVS 16.0092**	Page 2 of 5
Date of issue:	2020-08-26	Issue No: 1

Manufacturer: **M&C TechGroup Germany GmbH**
Rehhecke 79
40885 Ratingen-Lintorf
Germany

Additional manufacturing locations: **M&C TechGroup Germany GmbH**
Im Hirtenstall 9
78267 Aach
Germany

This certificate is issued as verification that a sample(s), representative of production, was assessed and tested and found to comply with the IEC Standard list below and that the manufacturer's quality system, relating to the Ex products covered by this certificate, was assessed and found to comply with the IECEx Quality system requirements.This certificate is granted subject to the conditions as set out in IECEx Scheme Rules, IECEx 02 and Operational Documents as amended

STANDARDS :
The equipment and any acceptable variations to it specified in the schedule of this certificate and the identified documents, was found to comply with the following standards

IEC 60079-0:2011 Explosive atmospheres - Part 0: General requirements
Edition:6.0

IEC 60079-11:2011 Explosive atmospheres - Part 11: Equipment protection by intrinsic safety "i"
Edition:6.0

This Certificate **does not** indicate compliance with safety and performance requirements other than those expressly included in the Standards listed above.

TEST & ASSESSMENT REPORTS:
A sample(s) of the equipment listed has successfully met the examination and test requirements as recorded in:

Test Report:

DE/BVS/ExTR16.0094/01

Quality Assessment Report:

DE/BVS/QAR17.0009/03

IECEx Certificate of Conformity

Certificate No.:	**IECEx BVS 16.0092**	Page 3 of 5
Date of issue:	2020-08-26	Issue No: 1

EQUIPMENT:
Equipment and systems covered by this Certificate are as follows:

General product information:

The fluid detecting sensors KS3 Ex, KS3 Ex SS, KS3 Ex Peek and KS3 Ex Peek SS are suitable for non-conductive and conductive media. It is used to monitor gas coolers and condensate drains. The sensor signal is converted to an electrical signal according to NAMUR. The electronic circuit of the different types is identical. They only differ in the construction of the sensor.

SPECIFIC CONDITIONS OF USE: NO

IECEx Certificate of Conformity

Certificate No.: **IECEx BVS 16.0092** Page 4 of 5

Date of issue: 2020-08-26 Issue No: 1

Equipment (continued):

Electrical parameters:

Terminal	X1.1, X1.3		
Maximum input voltage	U_i	13.5	V
Maximum input current	I_i	31	mA
Maximum input power	P_i	125	mW
Internal capacitance	C_i	150	nF
Internal inductance	L_i	negligible	

IECEx Certificate of Conformity

Certificate No.:	**IECEx BVS 16.0092**	Page 5 of 5
Date of issue:	2020-08-26	Issue No: 1

DETAILS OF CERTIFICATE CHANGES (for issues 1 and above)
This new issue of the Certificate is to cover a change in the ExCB for conducting surveillance assessment and issuing of QARs.